< With accessory >

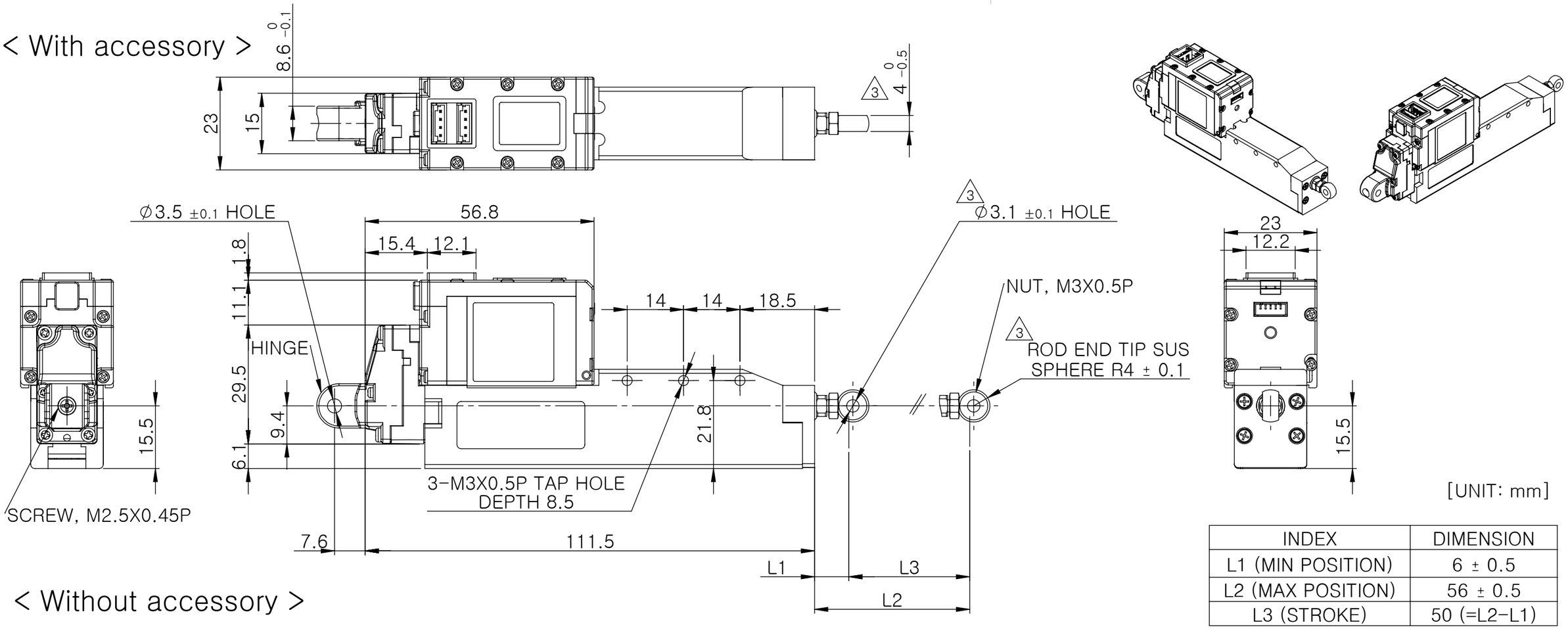

[UNIT: mm]

INDEX	DIMENSION
L1 (MIN POSITION)	6 ± 0.5
L2 (MAX POSITION)	56 ± 0.5
L3 (STROKE)	50 (=L2−L1)

NOTE #1:
WEIGHT : 142.4 gf (with accessory)
139.2 gf (without accessory)

< Without accessory >

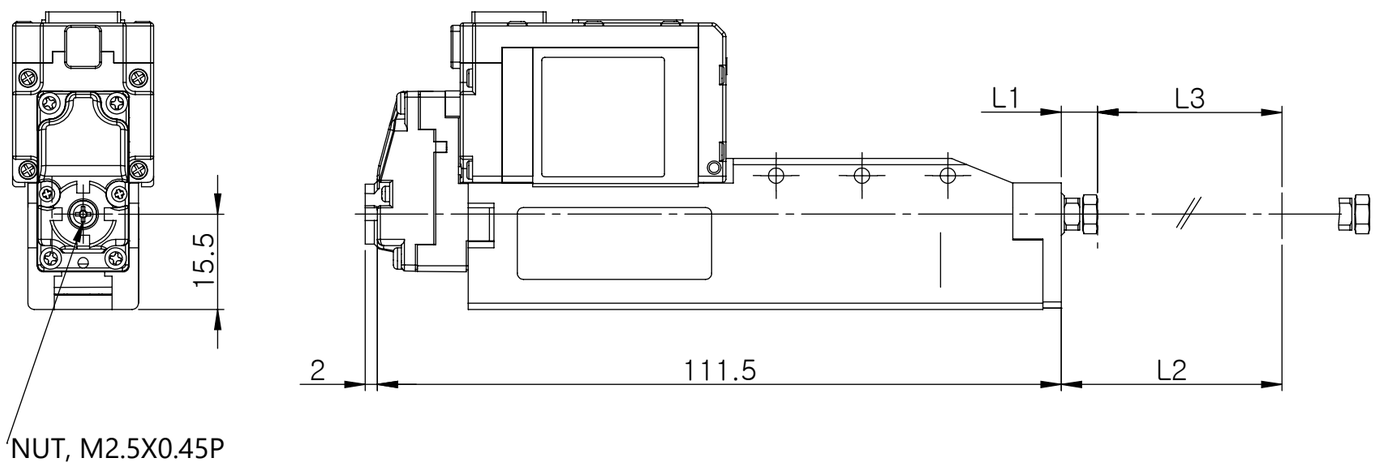

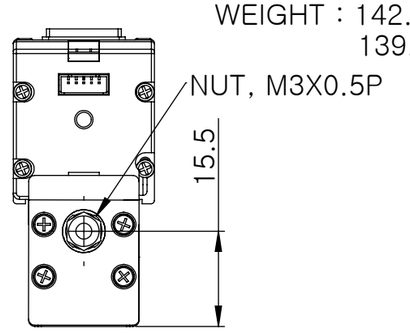

REV NO.	ECO NO	DESCRIPTION	DRAWN	DATE
2	NA	ROD END TIP CHANGE TO ROD END TIP SUS	YC KIM	2025.05.23
1	NA	INITIAL RELEASE	YC KIM	2023.12.19

MATERIAL: NA

PROCESS: NA

COLOUR: BLACK & STEEL

	NAME	SIGNATURE	DATE
DRAWN	YC KIM		2023.12.19
CHK'D			
APPV'D			

• DO NOT SCALE DRAWING.
• IF IN DOUBT, ASK.
• ALL DIMENSIONS IN mm.

VOLUME [mm³] :

WEIGHT [gf] : See Note #1

IR ROBOT

(Private and Confidential)
Copyright ©2013

PART NAME : 17Lf-xxF-50 Servo series[mm]

PART NO : IRMAA0188~190

REV NO: 02

SCALE 2:1 SHEET 1 OF 1 A3

NOTE #2:
1. ACCESSORY PART : SCREW M2.5X0.45P, HINGE, NUT M2.5X0.45P, NUT M3X0.5P, ROD END TIP SUS.
2. ACCESSORY IS THE PARTS TO CONNECTE TO THE FIXTURE.
3. UNSPECIFIED TOLERANCES ARE +/−0.2MM.