< With accessory >

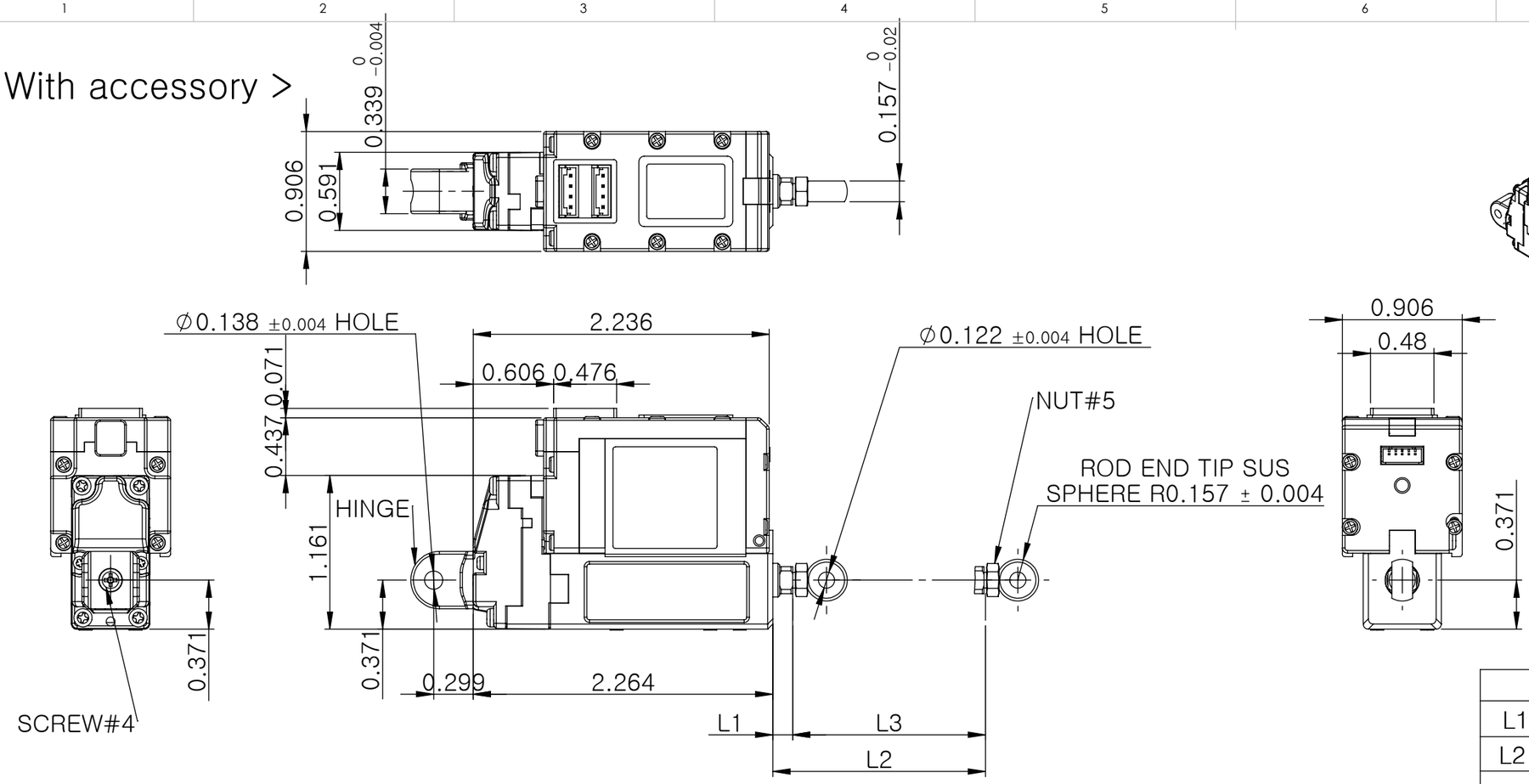

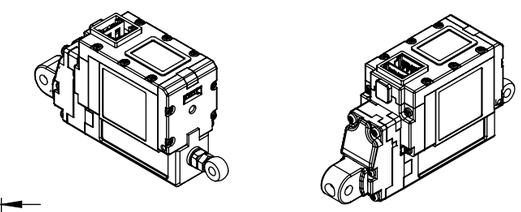

[UNIT: inch]

INDEX	DIMENSION
L1 (MIN POSITION)	0.1496± 0.02
L2 (MAX POSITION)	1.213 ± 0.02
L3 (STROKE)	1.063 (=L2−L1)

NOTE#1:
WEIGHT : 0.151 lbf (with accessory)
0.144 lbf (without accessory)

< Without accessory >

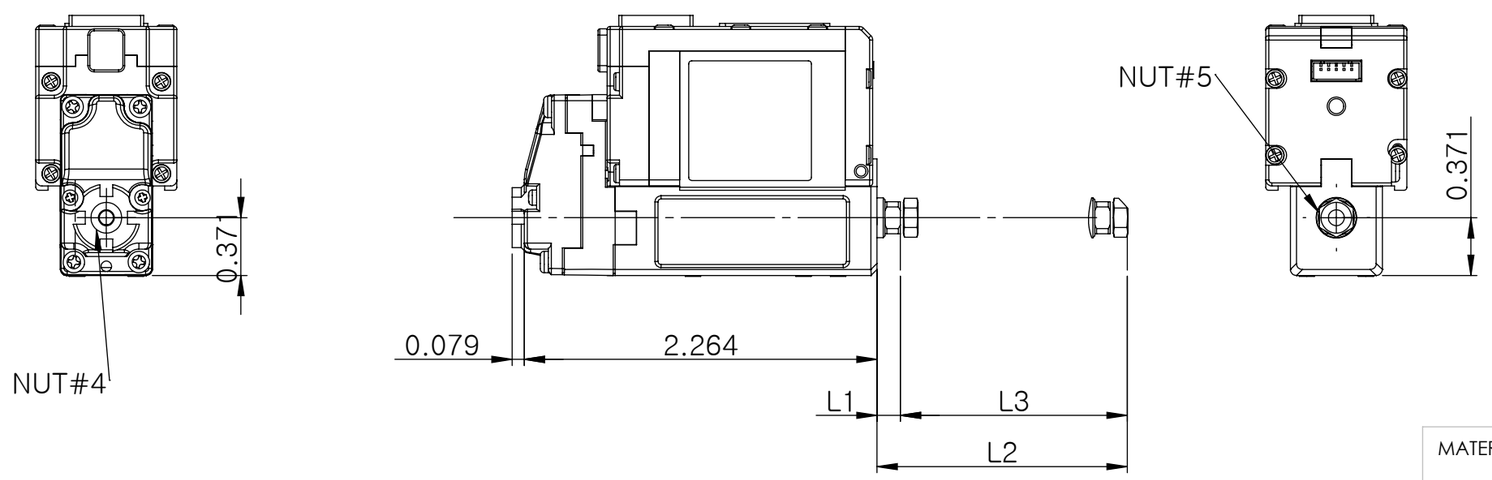

NOTE#2:
1. ACCESSORY PART : SCREW#4, HINGE, NUT#4,NUT#5 , ROD END TIP SUS.
2. ACCESSORY IS THE PARTS TO CONNECTE TO THE FIXTURE.
3. UNSPECIFIED TOLERANCES ARE +/−0.007inch

MATERIAL: NA				• DO NOT SCALE DRAWING. • IF IN DOUBT, ASK. • ALL DIMENSIONS IN inch.	IR ROBOT (Private and Confidential) Copyright ©2013
PROCESS: NA					PART NAME : 17Lf-xxF-27 Servo series[inch]
COLOUR: BLACK & STEEL					
	NAME	SIGNATURE	DATE	VOLUME [inch³] :	PART NO : IRMAA0182~184 / REV NO: 02
DRAWN	YC KIM		2023.12.19		
CHK'D				WEIGHT [lbf] : See Note #1	SCALE 2:1 / SHEET 1 OF 1 / A3
APPV'D					